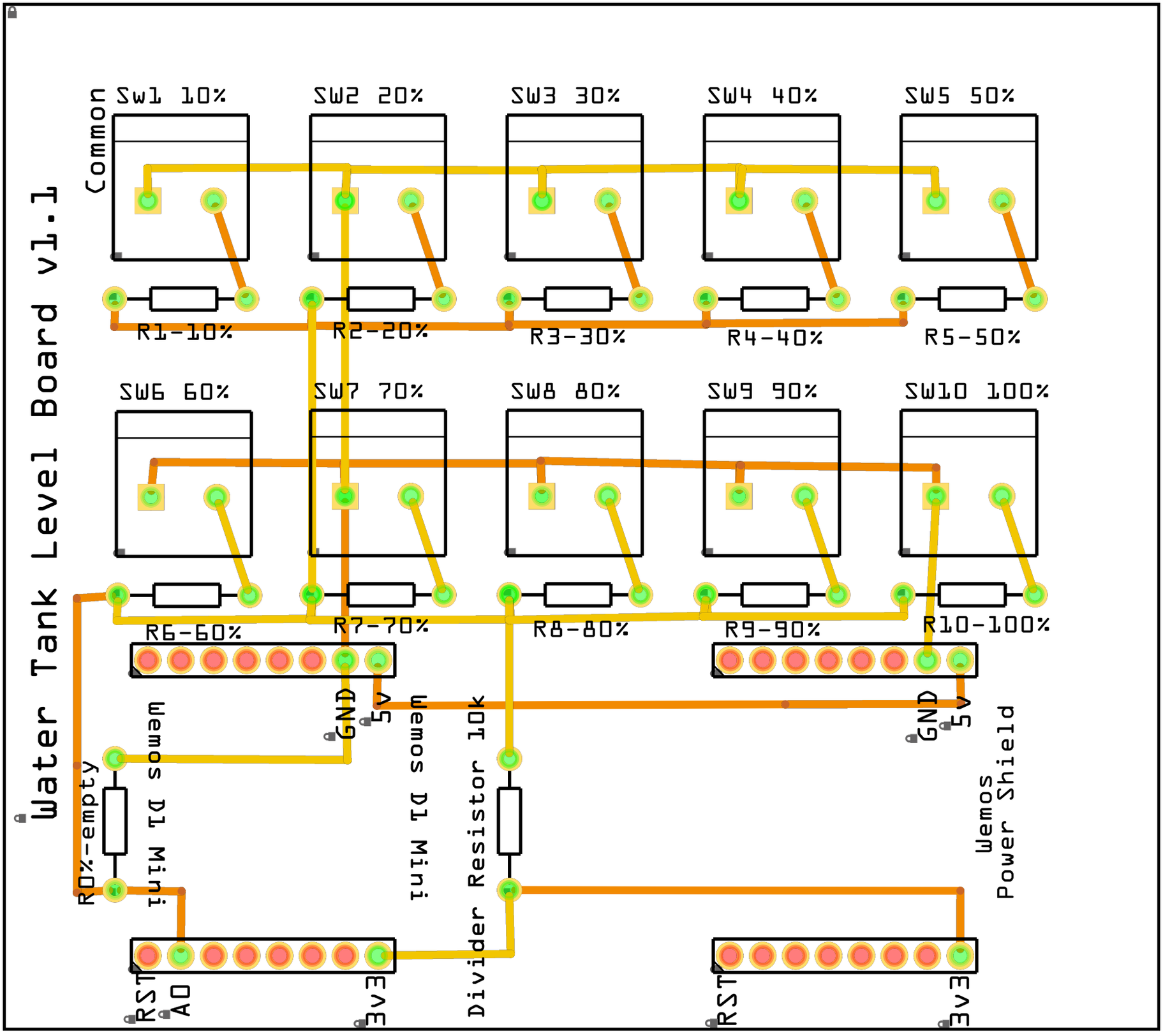
Water Tank Level Board v1.1
Common
SW1 10%
SW2 20%
SW3 30%
SW4 40%
SW5 50%
R1-10%
R2-20%
R3-30%
R4-40%
R5-50%
SW6 60%
SW7 70%
SW8 80%
SW9 90%
SW10 100%
R6-60%
R7-70%
R8-80%
R9-90%
R10-100%
R0%-empty
Wemos D1 Mini
GND
5V
Wemos D1 Mini
Divider Resistor 10k
GND
5V
Wemos
Power Shield
RST
A0
3V3
RST
3V3

fritzing